PARTS CATALOG

Super G3 FAX Board-N1

Canon

Nov 12 2003

PREFACE

This Parts Catalog contains listings of parts used

Diagrams are provided with the listings to aid the service technician in identifying clearly, the item to be orderd.
Whenever ordering parts, consult this Parts Catalog for all of the information pertaining to each item. Be sure to include, in the Parts Request, the full item description, the item part number, and the quantity.

COPYRIGHT (C) 1999 CANON INC.

Use of this manual should be strictly supervised to avoid disclosure of confidential information.

Contents

Parts List Index

Super G3 FAX Board-N1 1-1

Super G3 FAX Board-N1

XA ASSEMBLY LOCATION DIAGRAM 2-1
X10 FAX ASSEMBLY 2-2
X15 SPEAKER ASSEMBLY 2-4
X90 FAX BOARD PCB ASSEMBLY 2-5
XB LIST OF CONNECTORS 2-7

NUMERICAL INDEX

Super G3 FAX Board-N1

PARTS NUMBER	FIGURE & KEY NO.	PARTS NUMBER	FIGURE & KEY NO.	PARTS NUMBER	FIGURE & KEY NO
FB6-5461-000	X10 - 8	NPN	X10 -	VS1-6314-020	XB - J2119
FC5-1142-000	X90 - 1	NPN	XB -	VS1-6318-002	X90 - 13
FC5-1147-000	X10 - 5	NPN	XB - J2127	VS1-6318-002	XB - J2120
FC5-1162-000	X90 - 2	PCB	XB - J1	VS1-6319-040	X90 - 16
FC5-5472-000	X15 - 1	PCB	XB - J2	VS1-6319-040	XB - J2119
FC5-5473-000	X15 - 2	PCB	XB - J3	VS1-6702-006	XB - J2011
FC5-5506-000	X10 - 10	PCB	XB - J4	VS1-7110-002	XB - J820
FC5-5507-000	X10 - 10	PCB	XB - J7	VS3-0143-002	XB - J2126
FG3-1583-020	X10 - 3	PCB	XB - J10	VS3-0143-006	XB - J7
FG3-1584-020	X10 - 3	PCB	XB - J31	VS3-0143-011	XB - J911
FG3-1587-000	X90 - 8	PCB	XB - J101	VS3-5080-002	XB - J4
FG3-1992-000	X10 - 3	PCB	XB - J102	VS3-5080-005	XB - J10
FG3-2801-000	X90 - 4	PCB	XB - J104	VS3-5080-007	XB - J3
FG3-2820-000	X90 - 5	PCB	XB - J105	VS3-5080-007	XB - J911
FG3-2822-000	X90 - 18	PCB	XB - J260	VS4-0001-012	XB - J2010
FG3-2823-000	X90 - 17	PCB	XB - J261	VS4-0001-012	XB - J3010
FG3-2826-000	X90 - 6	PCB	XB - J280	VS4-0001-012	XB - J4010
FG3-2828-000	X90 - 7	PCB	XB - J281	VS4-0002-012	XB - J2010
FG3-2851-000	X10 - 1	PCB	XB - J282	VS4-0002-012	XB - J3010
FG3-2875-000	X90 - 9	PCB	XB - J820	VS4-0002-012	XB - J4010
FG3-3464-000	X10 - 3	PCB	XB - J911	VT2-5161-040	XB - J31
FH2-7072-000	X90 - 3	SYS	XB - J221	VT2-5161-040	XB - J1210
FH2-7072-000	XB - J1	SYS	XB - J1210	VT2-5161-040	XB - J2119
FH2-7072-000	XB - J102	SYS	XB - J1211	WE8-6096-000	X90 - 14
FH2-7073-000	X90 - 15	VS1-5057-002	X90 - 12	WE8-6096-000	X90 - 14
FH5-3218-000	X15 - 3	VS1-5057-002	XB - J2127	WS3-1105-000	XB - J7
FH5-3472-000	X10 - 11	VS1-5452-006	XB - J2	WS3-1105-000	XB - J2126
FM2-0103-000	X90 - 10	VS1-5452-006	XB - J101	WS3-1105-000	XB - J4010
FM2-0270-000	X15 -	VS1-5824-002	XB - J2127	WS3-5251-000	XB - J911
FM2-0271-000	X90 -	VS1-6302-002	XB - J281	WS3-5358-000	XB - J2127
FM2-0280-000	X90 -	VS1-6302-003	XB - J282	WS3-5569-000	XB - J104
FM2-0281-000	X90 -	VS1-6302-004	XB - J260	WS3-5569-000	XB - J221
FM2-0282-000	X90 -	VS1-6302-006	XB - J221	WS3-5569-000	XB - J260
FU5-8019-000	X10 - 6	VS1-6302-006	XB - J2011	WS3-5569-000	XB - J2011
FU5-8020-000	X10 - 6	VS1-6302-008	XB - J261	WS3-5720-000	XB - J261
HG1-4365-000	X90 - 11	VS1-6302-014	XB - J104	WS3-5720-000	XB - J2011
HG5-1866-000	X90 - 11	VS1-6313-020	XB - J31	WS3-5858-000	XB - J820
HG5-2587-000	X90 - 11	VS1-6313-020	XB - J1210	WS4-0217-000	XB - J2010
HG5-2598-000	X90 - 11	VS1-6313-020	XB - J2119	WS4-0218-000	XB - J2010
HH2-1914-000	X10 - 4	VS1-6314-002	XB - J280	WS4-0218-000	XB - J3010
HH2-2074-000	X10 - 4	VS1-6314-002	XB - J2120	WS4-0219-000	XB - J2010
HH2-2219-000	X10 - 4	VS1-6314-003	XB - J1211	WS4-0220-000	XB - J2010
HH2-2478-000	X10 - 4	VS1-6314-020	XB - J31	WS4-0220-000	XB - J3010
HH2-2830-000	X10 - 4	VS1-6314-020	XB - J1210	WS4-0220-000	XB - J4010

NUMERICAL INDEX

Super G3 FAX Board-N1

PARTS NUMBER	FIGURE & KEY NO.	PARTS NUMBER	FIGURE & KEY NO.	PARTS NUMBER	FIGURE & KEY NO
WT1-5155-000	XB - J3				
WT1-5155-000	XB - J4				
WT1-5155-000	XB - J10				
WT1-5155-000	XB - J282				
WT1-5155-000	XB - J911				
WT1-5155-000	XB - J911				
WT2-5565-000	X10 - 9				
WT8-5076-000	X10 - 2				
XA9-1386-000	X10 - 7				
XA9-1386-000	X10 - 7				
XA9-1386-000	X15 - 4				
XB6-7300-607	X10 - 501				
XB6-7300-607	X90 - 501				

Super G3 FAX Board-N1

100V	F62-0111-000
100V	F62-0121-000
120V	F62-0131-000
220V	F62-0141-000
240V	F62-0151-000
240V	F62-0161-000
220V	F62-0171-000
220V	F62-0181-000
240V	F62-0191-000

Contents

XA ASSEMBLY LOCATION DIAGRAM 2-1
X10 FAX ASSEMBLY 2-2
X15 SPEAKER ASSEMBLY 2-4
X90 FAX BOARD PCB ASSEMBLY 2-5
XB LIST OF CONNECTORS 2-7

FIGURE XA
ASSEMBLY LOCATION DIAGRAM

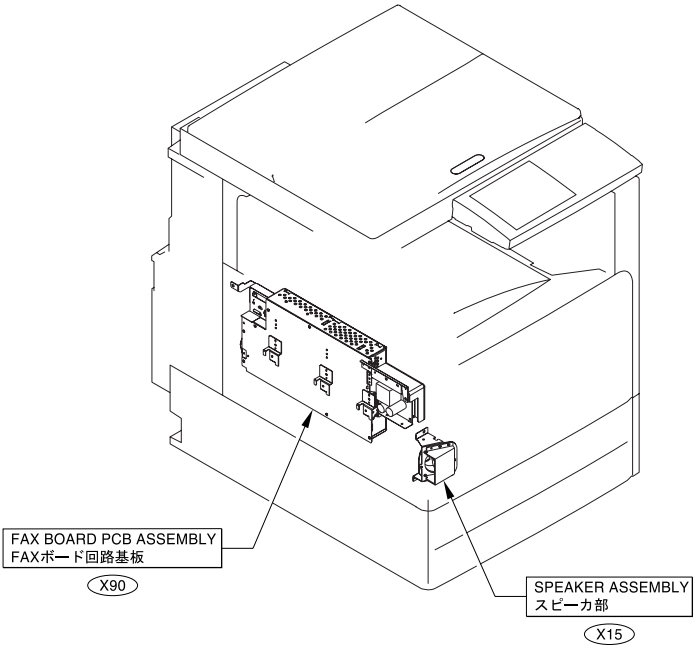

FIGURE X10
FAX ASSEMBLY

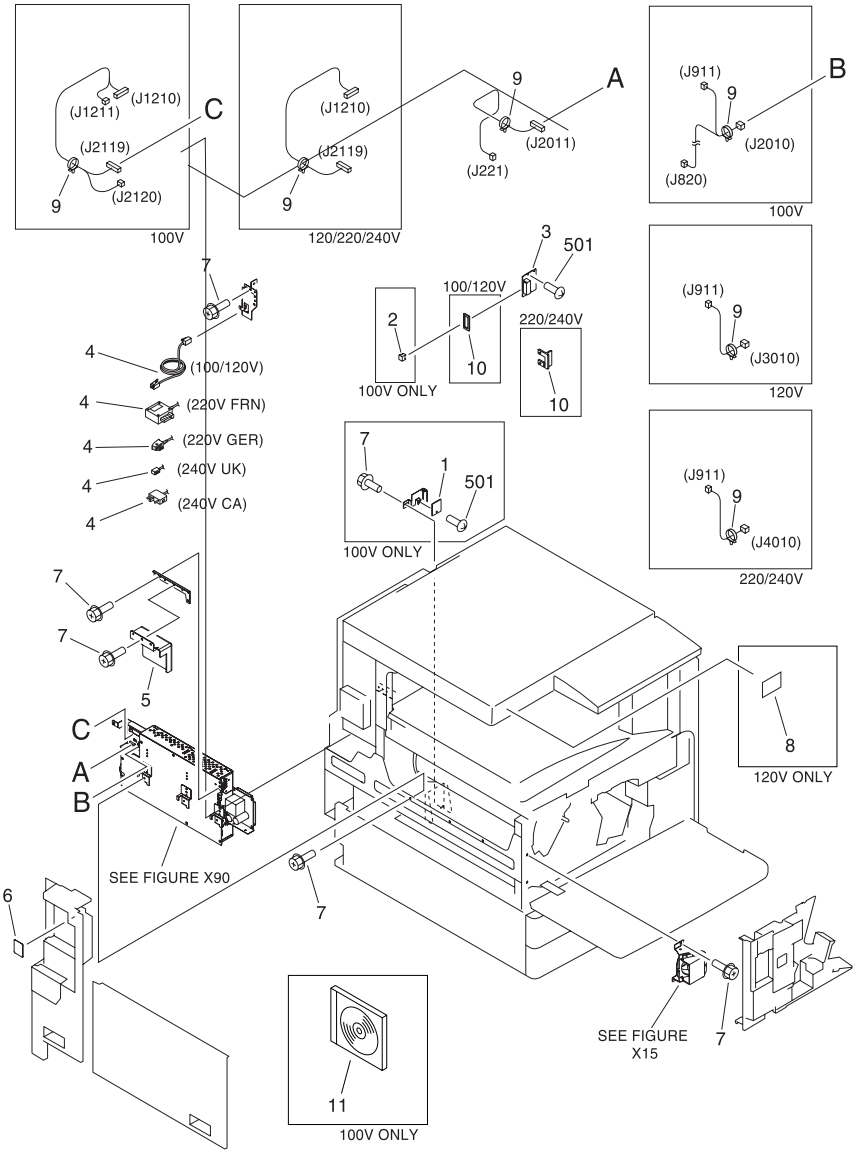

FIGURE & KEY NO.	PARTS NUMBER	RANK	Q'TY	DESCRIPTION	SERIAL NUMBER/ REMARKS	SVC
Fig.X10	NPN		RF	FAX ASSEMBLY		
1	FG3-2851-000		1	ARRESTER PCB ASSEMBLY	100V ONLY	
2	WT8-5076-000		1	SPACER, MODULAR	100V ONLY	
3	FG3-3464-000		1	G3 MODULAR PCB ASSEMBLY	100V	
3	FG3-1992-000		1	G3 MODULAR PCB ASSEMBLY	120V	
3	FG3-1583-020		1	G3 MODULAR PCB ASSEMBLY	220/240V	
3	FG3-1584-020		1	G3 MODULAR PCB ASSEMBLY	CA/CHN/ASIA	
4	HH2-2830-000		1	CORD, MODULAR	100/120V CSPL	
4	HH2-2219-000		1	MODULAR CABLE	220V FRN	
4	HH2-2074-000		1	MODULAR CABLE	220V GER	
4	HH2-1914-000		1	MODULAR CABLE	240V UK	
4	HH2-2478-000		1	MODULAR CORD	240V CA	
5	FC5-1147-000		1	COVER, PSEUDO CI		
6	FU5-8019-000		1	LABEL, FAX CONNECTOR	100V	
6	FU5-8020-000		1	LABEL, FAX CONNECTOR	120/220/240V	
7	XA9-1386-000		1	SCREW,RS,M3X8	100V ONLY	
7	XA9-1386-000		10	SCREW,RS,M3X8		
8	FB6-5461-000		1	LABEL, SUPER G3	120V ONLY	
9	WT2-5565-000		3	CLAMP, CABLE		
10	FC5-5506-000		1	SPACER, MODULAR JACK	100/120V	
10	FC5-5507-000		1	SPACER, MODULAR JACK	220/240V	
11	FH5-3472-000		1	CD-ROM, FAX SOFTWARE	100V ONLY	
501	XB6-7300-607		AR	SCREW,TP,M3X6		

FIGURE X15
SPEAKER ASSEMBLY

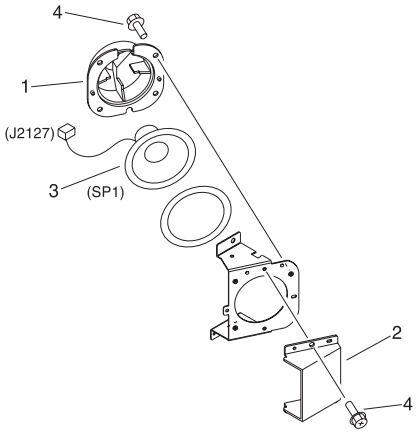

FIGURE & KEY NO.	PARTS NUMBER	RANK	Q'TY	DESCRIPTION	SERIAL NUMBER/ REMARKS	SVC
Fig.X15	FM2-0270-000		1	SPEAKER ASSEMBLY		
1	FC5-5472-000		1	HOLDER, SPEAKER		
2	FC5-5473-000		1	DUCT, SPEAKER		
3	FH5-3218-000		1	SPEAKER	SP1 J2127	
4	XA9-1386-000		6	SCREW,RS,M3X8		

FIGURE X90
FAX BOARD PCB ASSEMBLY

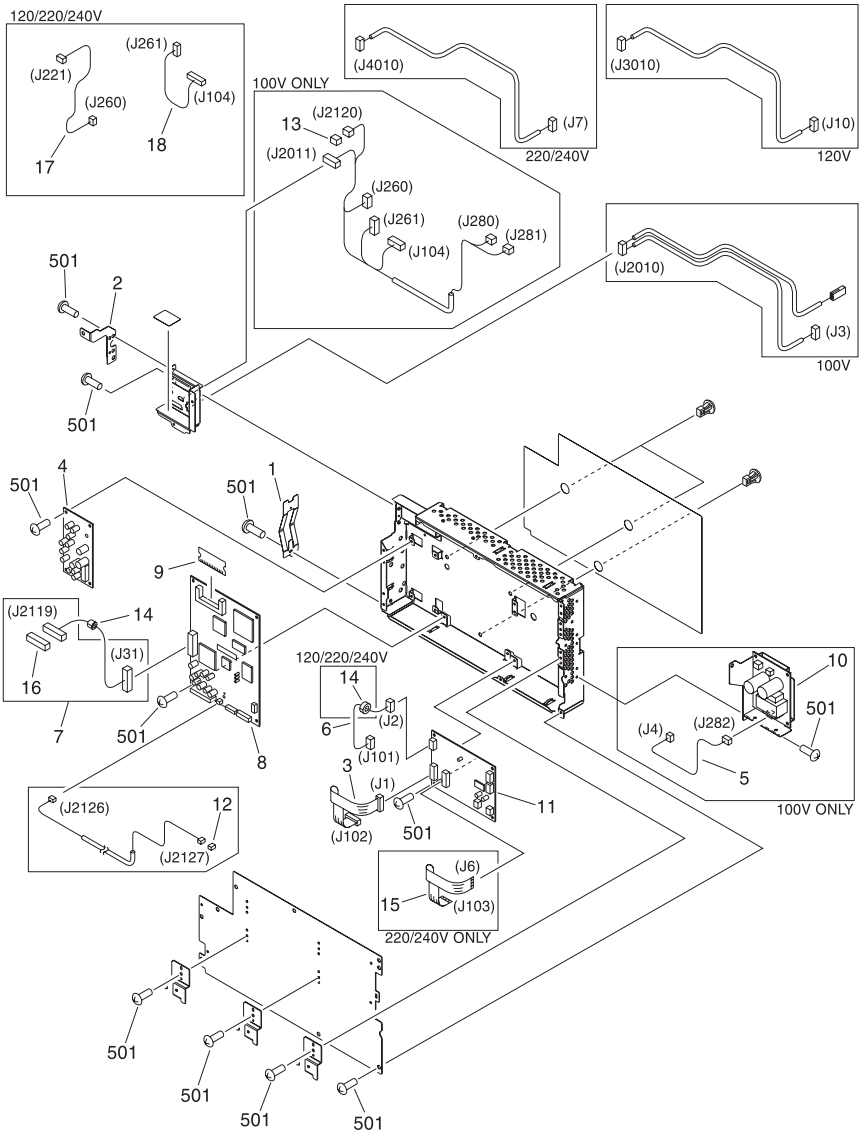

NOTE : This assembly does not include the parts shown with key No. 17 and 18.
注 : このユニットにKey No. 17, 18の部品は含まれません。

FIGURE & KEY NO.	PARTS NUMBER	RANK	Q'TY	DESCRIPTION	SERIAL NUMBER/ REMARKS	SVC
Fig.X90	FM2-0271-000		1	FAX BOARD PCB ASSEMBLY	100V	
Fig.X90	FM2-0280-000		1	FAX BOARD PCB ASSEMBLY	120V	
Fig.X90	FM2-0281-000		1	FAX BOARD PCB ASSEMBLY	EUR	
Fig.X90	FM2-0282-000		1	FAX BOARD PCB ASSEMBLY	CA/CHN/ASIA	
1	FC5-1142-000		1	PLATE, GROUNDING		
2	FC5-1162-000		1	PLATE, GROUNDING		
3	FH2-7072-000		1	CABLE, FLEXIBLE	J1,102	
4	FG3-2801-000		1	G3 FAX PS PCB ASSEMBLY		
5	FG3-2820-000		1	CABLE, PSEUDO CI HIGH VOLTAGE	100V ONLY J4,282	
6	FG3-2826-000		1	CABLE, G3 ANALOG	J2,101	
7	FG3-2828-000		1	CABLE, FAX INNER CONTROL	J31,2119	
8	FG3-1587-000		1	G3 FAX CONTROL PCB ASSEMBLY		
9	FG3-2875-000		1	DIMM ASS'Y		
10	FM2-0103-000		1	PSEUDO CI ASSEMBLY	100V ONLY	
11	HG5-1866-000		1	NCU PCB ASSEMBLY	100V	
11	HG1-4365-000		1	NCU PCB ASSEMBLY	120V	
11	HG5-2587-000		1	NCU PCB ASSEMBLY	EUR	
11	HG5-2598-000		1	NCU PCB ASSEMBLY	CA/CHN/ASIA	
12	VS1-5057-002		1	CONNECTOR, SNAP TIGHT	J2127	
13	VS1-6318-002		1	CONNECTOR, SNAP TIGHT	100V ONLY J2120	
14	WE8-6096-000		1	CORE, FERRITE		
14	WE8-6096-000		1	CORE, FERRITE	120/220/240V	
15	FH2-7073-000		1	CABLE, FLEXIBLE FLAT	220/240V ONLY J6,103	
16	VS1-6319-040		1	CONNECTOR, SNAP TIGHT	J2119	
17	FG3-2823-000		1	CABLE, POWER SUPPLY	SEE NOTE 120/220/240V J221,260	
18	FG3-2822-000		1	CABLE, FAX POWER SUPPLY	SEE NOTE 120/220/240V J104,251	
501	XB6-7300-607		AR	SCREW,TP,M3X6		

FIGURE XB
LIST OF CONNECTORS

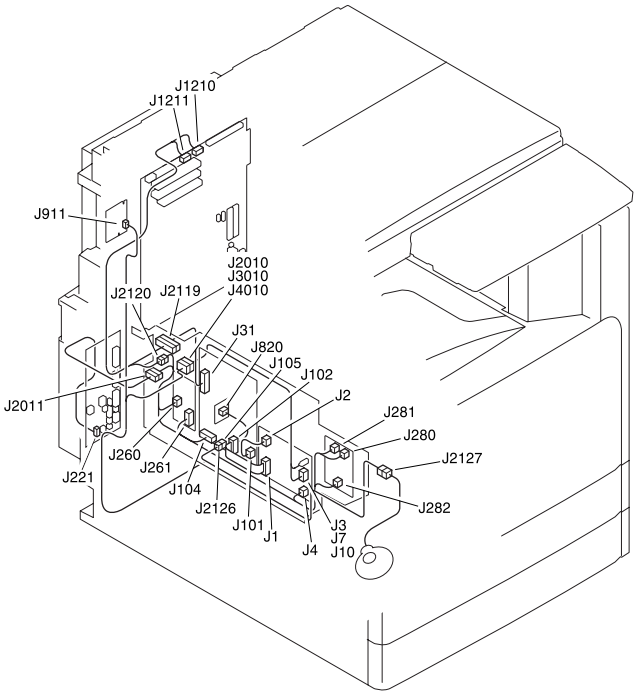

FIGURE & KEY NO.	PARTS NUMBER	RANK	Q'TY	DESCRIPTION	SERIAL NUMBER/ REMARKS	SVC
Fig.XB	NPN		RF	LIST OF CONNECTORS		
J1	PCB			NCU		
J1	FH2-7072-000		1	CABLE, FLEXIBLE		
J2	PCB			NCU		
J2	VS1-5452-006		1	CONNECTOR, 6P, FEMALE		
J3	PCB			NCU		
J3	VS3-5080-007		1	CONNECTOR, 7P, FEMALE	100V	
J3	WT1-5155-000		4	TERMINAL	100V	
J4	PCB			NCU	100V ONLY	
J4	VS3-5080-002		1	CONNECTOR, 2P, MALE	100V ONLY	
J4	WT1-5155-000		2	TERMINAL	100V ONLY	
J7	PCB			NCU		
J7	VS3-0143-006		1	CONNECTOR, 6P, FEMALE	220/240V	
J7	WS3-1105-000		6	SOCKET CONTACT	220/240V	
J10	PCB			NCU		
J10	VS3-5080-005		1	CONNECTOR, 5P, FEMALE	120V	
J10	WT1-5155-000		2	TERMINAL	120V	
J31	PCB			FAX BOARD		
J31	VS1-6313-020		1	CONNECTOR, 20P, FEMALE		
J31	VS1-6314-020		1	CONNECTOR, 20P, FEMALE		
J31	VT2-5161-040		1	HOLDER, CONNECTOR, 40P		
J101	PCB			G3 FAX CONTROL		
J101	VS1-5452-006		1	CONNECTOR, 6P, FEMALE		
J102	PCB			G3 FAX CONTROL		
J102	FH2-7072-000		1	CABLE, FLEXIBLE		
J104	PCB			G3 FAX CONTROL	100V ONLY	
J104	VS1-6302-014		1	CONNECTOR, 14P, MALE	100V ONLY	
J104	WS3-5569-000		8	PIN, CONTACT	100V ONLY	
J105	PCB			FAX BOARD		
J221	SYS			TO COPIER		
J221	VS1-6302-006		1	CONNECTOR, 6P, MALE		
J221	WS3-5569-000		6	PIN, CONTACT		

FIGURE & KEY NO.	PARTS NUMBER	RANK	Q'TY	DESCRIPTION	SERIAL NUMBER/ REMARKS	SVC
J260	PCB			G3 FAX PS		
J260	VS1-6302-004		1	CONNECTOR, 4P, MALE	100V ONLY	
J260	WS3-5569-000		4	PIN, CONTACT	100V ONLY	
J261	PCB			G3 FAX PS	100V ONLY	
J261	VS1-6302-008		1	CONNECTOR, 8P, MALE	100V ONLY	
J261	WS3-5720-000		6	SOCKET CONTACT, 22-28AWG	100V ONLY	
J280	PCB			PSEUDO CI	100V ONLY	
J280	VS1-6314-002		1	CONNECTOR, 2P, FEMALE	100V ONLY	
J281	PCB			PSEUDO CI	100V ONLY	
J281	VS1-6302-002		1	CONNECTOR, 2P, MALE	100V ONLY	
J282	PCB			PSEUDO CI	100V ONLY	
J282	VS1-6302-003		1	CONNECTOR, 3P, FEMALE	100V ONLY	
J282	WT1-5155-000		2	TERMINAL	100V ONLY	
J820	PCB			ARRESTER	100V ONLY	
J820	VS1-7110-002		1	CONNECTOR, 2P, FEMALE, W	100V ONLY	
J820	WS3-5858-000		1	CONTACT, SOCKET, 20-22AWG	100V ONLY	
J911	PCB			G3 MODULAR		
J911	VS3-0143-011		1	CONNECTOR, 11P, FEMALE	220/240V	
J911	VS3-5080-007		1	CONNECTOR, 7P, FEMALE	100/120V	
J911	WS3-5251-000		6	SOCKET CONTACT	220/240V	
J911	WT1-5155-000		4	TERMINAL	100V	
J911	WT1-5155-000		2	TERMINAL	120V	
J1210	SYS			TO COPIER		
J1210	VS1-6313-020		1	CONNECTOR, 20P, FEMALE		
J1210	VS1-6314-020		1	CONNECTOR, 20P, FEMALE		
J1210	VT2-5161-040		1	HOLDER, CONNECTOR, 40P		
J1211	SYS			TO COPIER	100V ONLY	
J1211	VS1-6314-003		1	CONNECTOR, 3P, MALE	100V ONLY	
J2010	VS4-0001-012		1	CONNECTOR, 12P, MALE	100V	
J2010	VS4-0002-012		1	CONNECTOR, 12P, FEMALE	100V	
J2010	WS4-0217-000		1	SOCKET CONTACT, 22-18AWG	100V	
J2010	WS4-0218-000		4	SOCKET CONTACT, 22-26AWG	100V	

FIGURE & KEY NO.	PARTS NUMBER	RANK	Q'TY	DESCRIPTION	SERIAL NUMBER/ REMARKS	SVC
J2010	WS4-0219-000		1	PIN CONTACT, 18-22AWG	100V	
J2010	WS4-0220-000		4	PIN CONTACT, 22-26AWG	100V	
J2011	VS1-6302-006		1	CONNECTOR, 6P, MALE		
J2011	VS1-6702-006		1	CONNECTOR, 6P, W	100V ONLY	
J2011	WS3-5569-000		6	PIN, CONTACT		
J2011	WS3-5720-000		6	SOCKET CONTACT, 22-28AWG	100V ONLY	
J2119	VS1-6313-020		2	CONNECTOR, 20P, FEMALE		
J2119	VS1-6314-020		2	CONNECTOR, 20P, FEMALE		
J2119	VS1-6319-040		1	CONNECTOR, SNAP TIGHT		
J2119	VT2-5161-040		2	HOLDER, CONNECTOR, 40P		
J2120	VS1-6314-002		2	CONNECTOR, 2P, FEMALE	100V ONLY	
J2120	VS1-6318-002		1	CONNECTOR, SNAP TIGHT	100V ONLY	
J2126	VS3-0143-002		1	CONNECTOR, 2P, FEMALE		
J2126	WS3-1105-000		2	SOCKET CONTACT		
J2127	NPN			SPEAKER		
J2127	VS1-5057-002		1	CONNECTOR, SNAP TIGHT		
J2127	VS1-5824-002		1	CONNECTOR, 2P, FEMALE		
J2127	WS3-5358-000		2	SOCKET CONTACT, 22-26AWG		
J3010	VS4-0001-012		1	CONNECTOR, 12P, MALE	120V	
J3010	VS4-0002-012		1	CONNECTOR, 12P, FEMALE	120V	
J3010	WS4-0218-000		2	SOCKET CONTACT, 22-26AWG	120V	
J3010	WS4-0220-000		2	PIN CONTACT, 22-26AWG	120V	
J4010	VS4-0001-012		1	CONNECTOR, 12P, MALE	220/240V	
J4010	VS4-0002-012		1	CONNECTOR, 12P, FEMALE	220/240V	
J4010	WS3-1105-000		6	SOCKET CONTACT	220/240V	
J4010	WS4-0220-000		6	PIN CONTACT, 22-26AWG	220/240V	

Prepared by

OFFICE IMAGING PRODUCTS QUALITY ASSURANCE CENTER

CANON INC.

Canon